Centre No.						Paper Reference							Surname	Initial(s)
Candidate No.						6	6	8	0	/	0	1	Signature	

Paper Reference(s)

6680/01

Edexcel GCE

Mechanics M4

Advanced/Advanced Subsidiary

Friday 1 June 2012 – Morning

Time: 1 hour 30 minutes

Examiner's use only

Team Leader's use only

Question Number	Leave Blank
1	
2	
3	
4	
5	
6	
Total	

Materials required for examination
Mathematical Formulae (Pink)

Items included with question papers
Nil

Candidates may use any calculator allowed by the regulations of the Joint Council for Qualifications. Calculators must not have the facility for symbolic algebra manipulation or symbolic differentiation/integration, or have retrievable mathematical formulae stored in them.

Instructions to Candidates

In the boxes above, write your centre number, candidate number, your surname, initials and signature.
Check that you have the correct question paper.
Answer ALL the questions.
You must write your answer to each question in the space following the question.
Whenever a numerical value of g is required, take $g = 9.8$ m s^{-2}.
When a calculator is used, the answer should be given to an appropriate degree of accuracy.

Information for Candidates

A booklet 'Mathematical Formulae and Statistical Tables' is provided.
Full marks may be obtained for answers to ALL questions.
The marks for individual questions and the parts of questions are shown in round brackets: e.g. **(2)**.
There are 6 questions in this question paper. The total mark for this paper is 75.
There are 28 pages in this question paper. Any blank pages are indicated.

Advice to Candidates

You must ensure that your answers to parts of questions are clearly labelled.
You should show sufficient working to make your methods clear to the Examiner.
Answers without working may not gain full credit.

This publication may be reproduced only in accordance with Pearson Education Ltd copyright policy.
©2012 Pearson Education Ltd.

Printer's Log. No.
P40110A
W850/R6679/57570 5/4/5/3/3

P 4 0 1 1 0 A 0 1 2 8

Turn over

PEARSON

Leave blank

1. A smooth uniform sphere S, of mass m, is moving on a smooth horizontal plane when it collides obliquely with another smooth uniform sphere T, of the same radius as S but of mass $2m$, which is at rest on the plane. Immediately before the collision the velocity of S makes an angle α, where $\tan\alpha = \frac{3}{4}$, with the line joining the centres of the spheres. Immediately after the collision the speed of T is V. The coefficient of restitution between the spheres is $\frac{3}{4}$.

(a) Find, in terms of V, the **speed** of S

(i) immediately before the collision,

(ii) immediately after the collision.

(9)

(b) Find the angle through which the direction of motion of S is deflected as a result of the collision.

(4)

Leave blank

Question 1 continued

Leave blank

2. A ship A is moving at a constant speed of 8 km h^{-1} on a bearing of $150°$. At noon a second ship B is 6 km from A, on a bearing of $210°$. Ship B is moving due east at a constant speed. At a later time, B is $2\sqrt{3}$ km due south of A.

Find

(i) the time at which B will be due east of A,

(ii) the distance between the ships at that time.

(13)

Leave blank

Question 2 continued

Leave blank

3. Two particles, of masses m and $2m$, are connected to the ends of a long light inextensible string. The string passes over a small smooth fixed pulley and hangs vertically on either side. The particles are released from rest with the string taut. Each particle is subject to air resistance of magnitude kv^2, where v is the speed of each particle after it has moved a distance x from rest and k is a positive constant.

(a) Show that $\frac{\mathrm{d}}{\mathrm{d}x}(v^2)+\frac{4k}{3m}v^2=\frac{2g}{3}$

(6)

(b) Find v^2 in terms of x.

(5)

(c) Deduce that the tension in the string, T, satisfies

$$\frac{4mg}{3} \leqslant T < \frac{3mg}{2}$$

(5)

Leave blank

Question 3 continued

Leave blank

4. A rescue boat, whose maximum speed is 20 km h^{-1}, receives a signal which indicates that a yacht is in distress near a fixed point P. The rescue boat is 15 km south-west of P. There is a constant current of 5 km h^{-1} flowing uniformly from west to east. The rescue boat sets the course needed to get to P as quickly as possible. Find

(a) the course the rescue boat sets,

(4)

(b) the time, to the nearest minute, to get to P.

(4)

When the rescue boat arrives at P, the yacht is just visible 4 km due north of P and is drifting with the current. Find

(c) the course that the rescue boat should set to get to the yacht as quickly as possible,

(1)

(d) the time taken by the rescue boat to reach the yacht from P.

(1)

Leave blank

Question 4 continued

Leave blank

5.

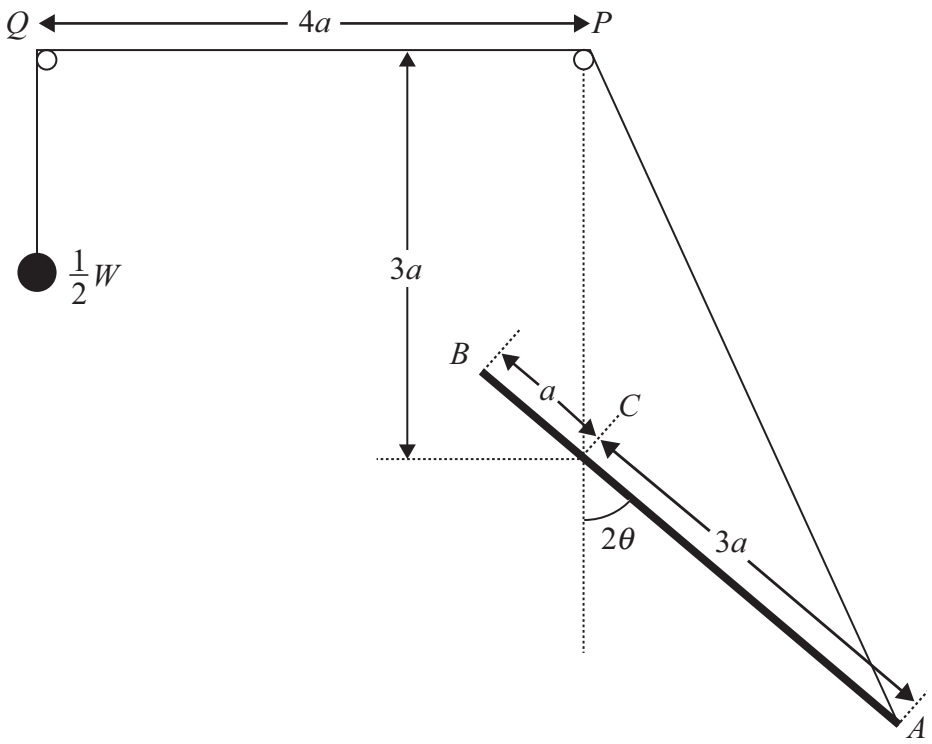

Figure 1

A uniform rod AB, of length $4a$ and weight W, is free to rotate in a vertical plane about a fixed smooth horizontal axis which passes through the point C of the rod, where $AC = 3a$. One end of a light inextensible string of length L, where $L > 10a$, is attached to the end A of the rod and passes over a small smooth fixed peg at P and another small smooth fixed peg at Q. The point Q lies in the same vertical plane as P, A and B. The point P is at a distance $3a$ vertically above C and PQ is horizontal with $PQ = 4a$. A particle of weight $\frac{1}{2}W$ is attached to the other end of the string and hangs vertically below Q. The rod is inclined at an angle 2θ to the vertical, where $-\pi < 2\theta < \pi$, as shown in Figure 1.

(a) Show that the potential energy of the system is

$$Wa(3\cos\theta - \cos 2\theta) + \text{constant}$$

(4)

(b) Find the positions of equilibrium and determine their stability.

(8)

P 4 0 1 1 0 A 0 2 0 2 8

Leave blank

Question 5 continued

Leave blank

6. Two points A and B are in a vertical line, with A above B and $AB = 4a$. One end of a light elastic spring, of natural length a and modulus of elasticity $3mg$, is attached to A. The other end of the spring is attached to a particle P of mass m. Another light elastic spring, of natural length a and modulus of elasticity mg, has one end attached to B and the other end attached to P. The particle P hangs at rest in equilibrium.

(a) Show that $AP = \frac{7a}{4}$

(3)

The particle P is now pulled down vertically from its equilibrium position towards B and at time $t = 0$ it is released from rest. At time t, the particle P is moving with speed v and has displacement x from its equilibrium position. The particle P is subject to air resistance of magnitude mkv, where k is a positive constant.

(b) Show that

$$\frac{d^2x}{dt^2} + k\frac{dx}{dt} + \frac{4g}{a}x = 0$$

(5)

(c) Find the range of values of k which would result in the motion of P being a damped oscillation.

(3)

Leave blank

Question 6 continued